OPERATION

To operate, push the switch on the end of the Towel Stand by the cord set. It will be illuminated when on and will be dull when off.

Your Warmrail Heated Towel Stand costs less or similar to run to a regular light bulb. It will take approximately 45 minutes for the Heated Towel Stand to reach its operating temperature, although this time will be shorter if towels are in place.

The Warmrails Heated Towel Stand operates with a fixed power output, (typically 90° F above the ambient temperature). However, when operated with several layers of towels over the Heated Towel Stand, the temperature will increase as much as 105° F above ambient. Once the towels are removed and where the rails are exposed, the temperature of the Heated Towel Stand will quickly drop back. When operating correctly, the Heated Towel Stand, although hot to the touch, is not hot enough to cause scorching (even a temperature of 115° F appears hot to the touch).

Please note: damp or wet material that has either been dyed, or is not colorfast, can cause discoloration in the finish if that material is draped over a Heated Towel Stand while hot. Again, it is suggested that items are dried by using a completely protective layer of material such as a towel underneath.

Warning—this appliance is intended only for drying textiles washed in water. Fabrics that contain soap or detergent residue may show what appears to be scorch marks. However this is simply the discoloration of the residue. The Heated Towel Stand does not reach sufficient temperature to scorch fabric.

Warmrails does not accept responsibility for any damage, discoloration or other damage to any item regardless of circumstance. To reduce the possibility of damage, do not place any items other than towels directly on the Heated Towel Stand—always have a completely protective layer of towels between the Heated Towel Stand and any other item.

CARE

The Heated Towel Stand should be wiped down from time to time with a damp cloth.

Do not use any abrasive or corrosive cleaners.

Marketed and Distributed by

Warmrails

Huntington Beach, CA 92649
Phone Toll Free: (877) 927-6724

Warmrails towelwarmer and dryingrack

TRAFALGAR INSTRUCTION MANUAL

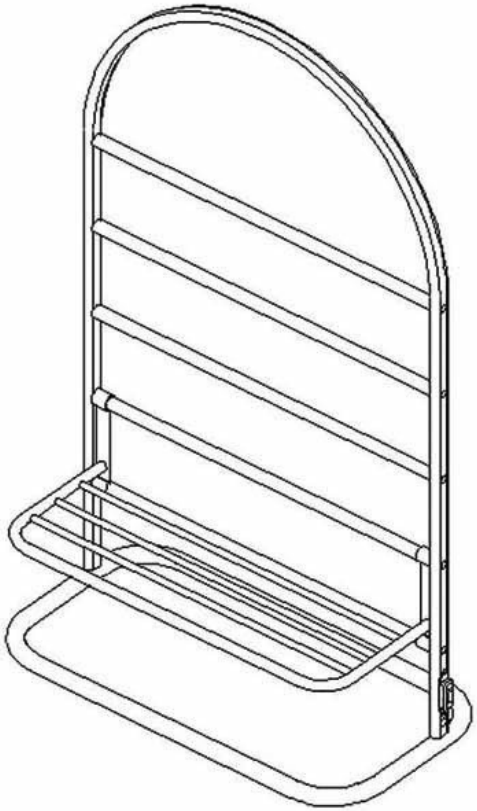

c UL US LISTED

ASSEMBLY

This appliance must be used in accordance with any prevailing electrical code and relevant electrical wiring rules and regulations and in particular those regulations that cover use of appliances and accessories in damp situations such as bathrooms, showers, laundries and other areas with fixed water containers.

- Your Warmrail comes complete with two long bolts and an allen key which you will find in a small plastic bag. Use the bolts to secure the base to the Heated Towel Stand. You will also find two hanging plates and two short screws.
- To assemble, first remove the long bolts and allen key from the plastic bag.
- Hold the Heated Towel Stand upside down (perhaps leaning it against a chair) and position the base so that the bolt holes line up with the two vertical bars of the Heated Towel Stand.
- You will notice that the bolt holes on the base are off-center. For stability, the stand should be positioned so that it is attached towards the back of the base (ie with the largest part of the base to the front of the towel stand). You can assemble the Trafalgar so that the cord set comes from the right or left side.
- Insert one bolt through each hole and use the allen key to tighten.
- The Trafalgar freestanding heated towel rack must only be used with the base properly fitted.
- The Trafalgar comes with an optional storage shelf. Take the hanging plates and two short screws and simply insert the screws into the plates and then use the allen key to screw them into the ends of the shelf. Turn the plates to a vertical position and hook over one of the horizontal bars of the stand (preferably a lower bar).
- Once the base is securely attached, the Heated Towel Stand can be plugged into an electrical outlet (we recommend using a GFI protected outlet). Push the on/off switch so that the light is illuminated and your Warmrail is ready for use.
- Remember, Warmrails are so energy efficient, you can leave them running continuously.

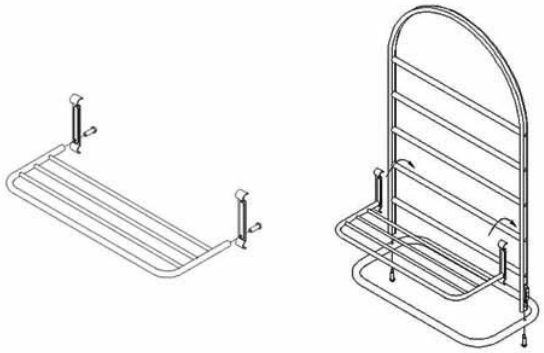

SAFETY INFORMATION

When using any electrical appliance, basic safety precautions should always be observed.

READ THESE INSTRUCTIONS CAREFULLY

- Do NOT use this appliance for other than its intended use.
- To avoid a hazard, the Heated Towel Stand MUST NOT be used to hold towels or any other articles that have been in contact with oil, petroleum based products or dry cleaning fluids (unless completely protected by a layer of material such as a towel underneath).
- Use this appliance only on the voltage specified on the rating plate, or elsewhere in the instructions.
- Regulations require that only authorized persons carry out electrical work. For your own safety and that of others, ensure this is done.
- This appliance is not intended for use by young children or infirm persons without supervision.
- Young children should be supervised to ensure they do NOT play with this appliance.
- Do NOT store your Heated Towel Stand while hot or still connected to the power supply.
- Do NOT immerse the Heated Towel Stand in water or any other liquid.
- Do NOT allow the cord set to come into contact with heated surfaces during operation.
- This product should NOT be used outdoors.

If the power supply cord for this equipment becomes damaged it must be replaced with the special cord or assembly. Special tools are required for the replacement of the power supply cord and element. A qualified electrician must undertake this replacement.

SPECIFICATIONS

HEIGHT	WIDTH	DEPTH
42 1/4"	26"	13 3/8"

Supply: 120 volts a.c. 60 Hz, single phase